User's Guide
SLOU361–February 2013

DANCEVM-A

The Digital ANC EVM-A (DANCEVM-A) allows on-the-fly tuning of Digital Noise-Cancelling headphones using PurePath™ Studio.

Contents

1 Introduction 2
2 Getting Started 2
  2.1 Hardware Setup 2
  2.2 Loading Code from PurePath Studio 3
3 DANCEVM-A Default Jumper Settings 6
4 DANCEVM-A Schematics, Layout Views and Bill of Materials 7
  4.1 DANCEVM-A Schematics 7
  4.2 DANCEVM-A Layout Views 17
  4.3 DANCEVM-A Bill of Materials 18

List of Figures

1 Default DANCEVM-A Jumper Settings 3
2 Generic Music Chip Process Flow 4
3 PPS Device Select (Music Chip) 4
4 Generic DANC Chip Process Flow 4
5 PPS Device Select (DANC Chips) 5
6 Feedback ANC Component Properties 5
7 Hybrid ANC Component Properties 5
8 DANCEVM-A Schematic - Page 1 of 10 7
9 DANCEVM-A Schematic - Page 2 of 10 8
10 DANCEVM-A Schematic - Page 3 of 10 9
11 DANCEVM-A Schematic - Page 4 of 10 10
12 DANCEVM-A Schematic - Page 5 of 10 11
13 DANCEVM-A Schematic - Page 6 of 10 12
14 DANCEVM-A Schematic - Page 7 of 10 13
15 DANCEVM-A Schematic - Page 8 of 10 14
16 DANCEVM-A Schematic - Page 9 of 10 15
17 DANCEVM-A Schematic - Page 10 of 10 16
18 DANCEVM-A Layout View 17

List of Tables

1 DANCEVM-A Default Jumper Settings 6
2 Bill of Materials for DANCEVM-A REVD 18

PurePath is a trademark of Texas Instruments.

Copyright © 2013, Texas Instruments Incorporated

WARNING

EXPORT NOTICE

Recipient agrees to not knowingly export or re-export, directly or indirectly, any product or technical data (as defined by the U.S., EU, and other Export Administration Regulations) including software, or any controlled product restricted by other applicable national regulations, received from Disclosing party under this Agreement, or any direct product of such technology, to any destination to which such export or re-export is restricted or prohibited by U.S. or other applicable laws, without obtaining prior authorization from U.S. Department of Commerce and other competent Government authorities to the extent required by those laws. This provision shall survive termination or expiration of this Agreement. According to our best knowledge of the state and end-use of this product or technology, and in compliance with the export control regulations of dual-use goods in force in the origin and exporting countries, this technology is classified as follows:

US ECCN: 3E991
EU ECCN: EAR99

And may require export or re-export license for shipping it in compliance with the applicable regulations of certain countries.

1 Introduction

This document describes the hardware and software configuration of the DANCEVM-A board.

2 Getting Started

The DANCEVM-A has 3 audio CODECs (AIC3254 and two AIC3256s) and an audio amplifier (TPA6130A2). For simplicity, these devices are labeled as follows:

1. Music Chip – AIC3254 (U10)
2. DANC_L – AIC3256 (U4)
3. DANC_R – AIC3256 (U3)
4. HP Amp – TPA6130A2 (U1)

Follow the steps in this section to configure the hardware and software for music playback. Further details can be found in the DANC Programmer Guide. Specifically, refer to its MiniDSP Code Loading Process section.

2.1 Hardware Setup

The default jumper settings are shown in Figure 1. This assumes a hybrid ANC configuration. Refer to the EVM schematic (Section 4.1) and Section 3 for details.

Copyright © 2013, Texas Instruments Incorporated

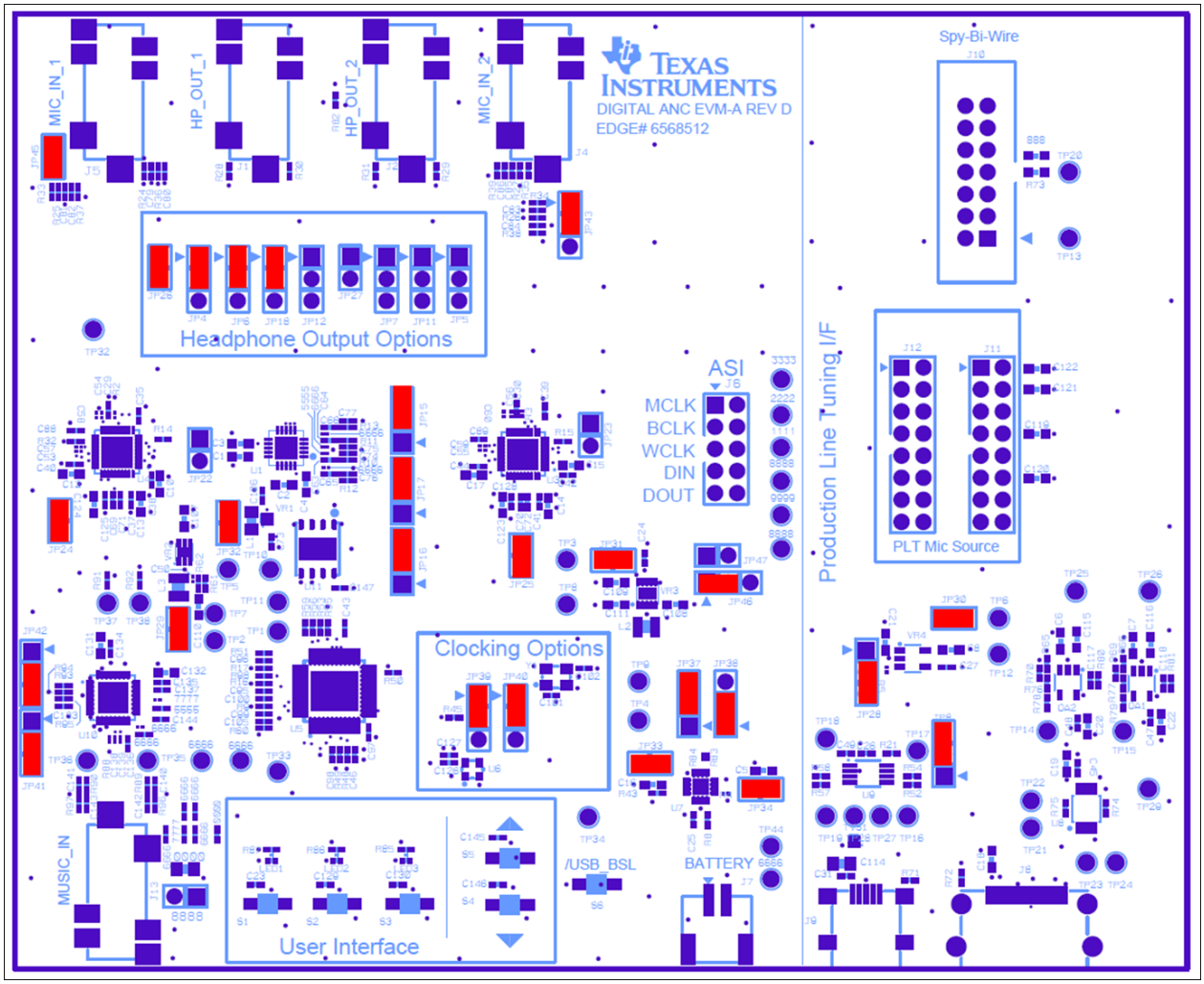

Figure 1. Default DANCEVM-A Jumper Settings

2.2 Loading Code from PurePath Studio

This subsection describes how to download the ANC code from PurePath Studio (PPS) into the DANCEVM-A chips through USB. Tuning details are not discussed in this document.

> **CAUTION**
>
> Never wear headphones while adjusting any PurePath Studio parameter. Setting an incorrect value will cause very loud speaker feedback.

1. Unzip the DANC Package and locate the DANC Programmer Guide. That document specifies where to obtain the required software packages.
2. Place the PurePath components found in *.\Components* folder of the DANC Package into *[User]\My Documents\Texas Instruments Inc\PurePath Studio (Portable Audio) MiniDSP 5.95\ UserComponentLibrary*.
3. Configure the board per the jumper settings shown in Section 2.1, or as required by the application.
4. Connect a USB cable to the USB jack.
5. Open two instances of PurePath Studio.

Copyright © 2013, Texas Instruments Incorporated

6. In one instance, open the desired **Music Chip** process flow (for example, ATHY1-MUS-24.0000-3BQ-LOWPWR). It should look something similar to Figure 2.
7. Set the TargetBoard property of the Framework to **USB**.

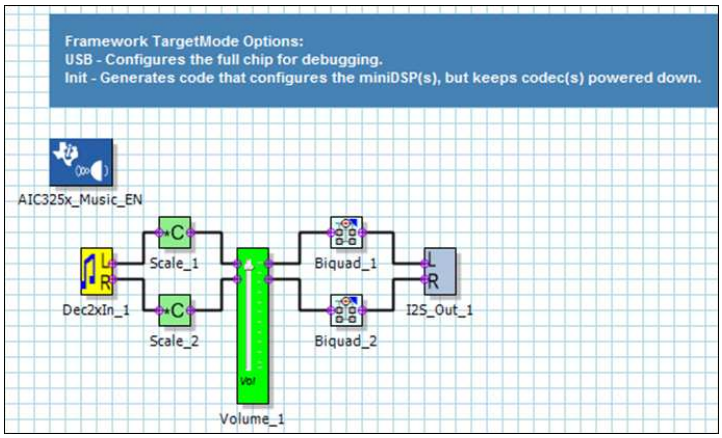

Figure 2. Generic Music Chip Process Flow

8. Select *Build→Download Code*. Select *FWIDMusic Chip*.

Figure 3. PPS Device Select (Music Chip)

9. Cancel any additional messages.
10. In the other PurePath instance open the desired **DANC** process flow (for example, ATHY1-DNC-24.0000-B-HY-LOWPWR_CASCADE). It should look something similar to Figure 4.
11. Set the TargetBoard property of the Framework to **USB**.

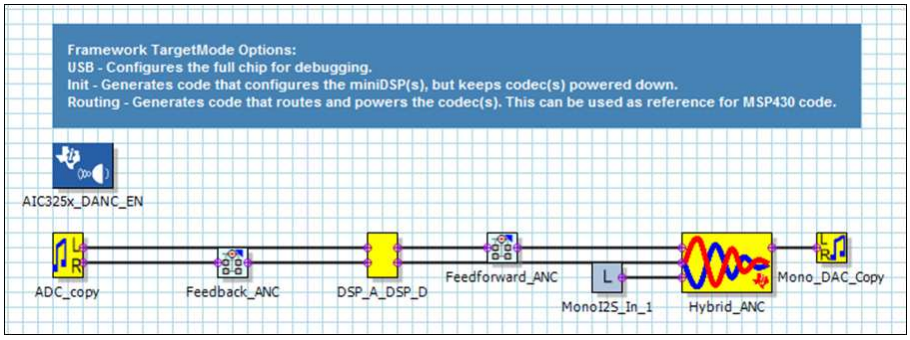

Figure 4. Generic DANC Chip Process Flow

12. Select *Build→Download Code*. Select *FWIDDANC_L Chip*.

Copyright © 2013, Texas Instruments Incorporated

Figure 5. PPS Device Select (DANC Chips)

13. Runtime parameters can be changed on-the-fly in either PurePath instance.
14. Click the **ANC** component in the **DANC** process flow. Observe the **Properties** window on the right. The Control_Coeff controls the master volume. The ANC_Gain, Feedforward_Gain and Feedback_Gain control the respective microphone gain into the ANC block. The Music_Gain controls the music mix level. All these gains are linear; a *0* disables the control.

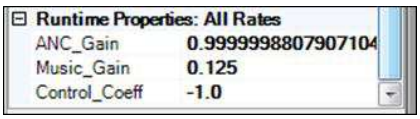

Figure 6. Feedback ANC Component Properties

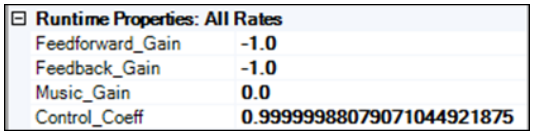

Figure 7. Hybrid ANC Component Properties

Copyright © 2013, Texas Instruments Incorporated

3 DANCEVM-A Default Jumper Settings

The DANCEVM-A default jumper settings are shown in Table 1.

Table 1. DANCEVM-A Default Jumper Settings

Label	Default Position	Description	Label	Default Position	Description
Headphone Output Options (Sheet 5)			**DANC Chip Options (Sheet 3 and Sheet 4)**		
JP26	On	Grounds HP_OUT_1 sleeve	JP45	On	MIC_IN_1 tip connected to circuit
JP4	1-2	—	JP24	On	DANC_L HP not in GCHP
JP6	1-2	—	JP22	Off	DANC_L DOUT floating
JP18	1-2	—	JP43	1-2	MIC_IN_2 ring connected to DANC_R
JP12	Off	—	JP25	On	DANC_R HP not in GCHP
JP27	Off	Grounds HP_OUT_2 sleeve	JP23	Off	DANC_R DOUT floating
JP7	Off	—	JP45	On	MIC_IN_1 tip connected to circuit
JP11	Off	—	JP24	On	DANC_L HP not in GCHP
JP5	Off	—	JP22	Off	DANC_L DOUT floating
TPA6130A2 Input Options (Sheet 5)			**Power Supply Options (Sheet 7)**		
JP16	2-3	LM source = ground	JP46	1-2	Power Save disabled
JP17	2-3	RP source = DANCR_LOL	JP47	Off	MSP PS control disabled
JP15	2-3	RM source = ground	JP37	2-3	EN1 = 0
Clocking Options (Sheet 6)			JP38	1-2	EN2 = 1
JP39	1-2	—	**PLT Options (Sheet 8)**		
JP40	1-2	—	JP28	2-3	VPLT disabled
Music Chip Options (Sheet 2)			JP8	2-3	PLT I^2C buffer disabled
JP48	Off	Ground loop break circuit enabled	**PLT Microphone Source (Sheet 5)**		
JP41	2-3	Music DIN source = ‘0’	J12	All Off	Selects between LO or HP
JP42	2-3	Music DOUT pin to DIN net	J11	All Off	Routes mics to the PLT
Current Measurement (Sheet 7 and Sheet 8)					
JP31	On	VSYS to VIO			
JP29	On	VSYS to DVDD			
JP32	On	VSYS to +1.8 V			
JP34	On	Battery to System			
JP33	On	Charger output to VSYS			
JP30	On	VSYS to VPLT			

Copyright © 2013, Texas Instruments Incorporated

4 DANCEVM-A Schematics, Layout Views and Bill of Materials

4.1 DANCEVM-A Schematics

The DANCEVM-A schematic is provided in the following pages.

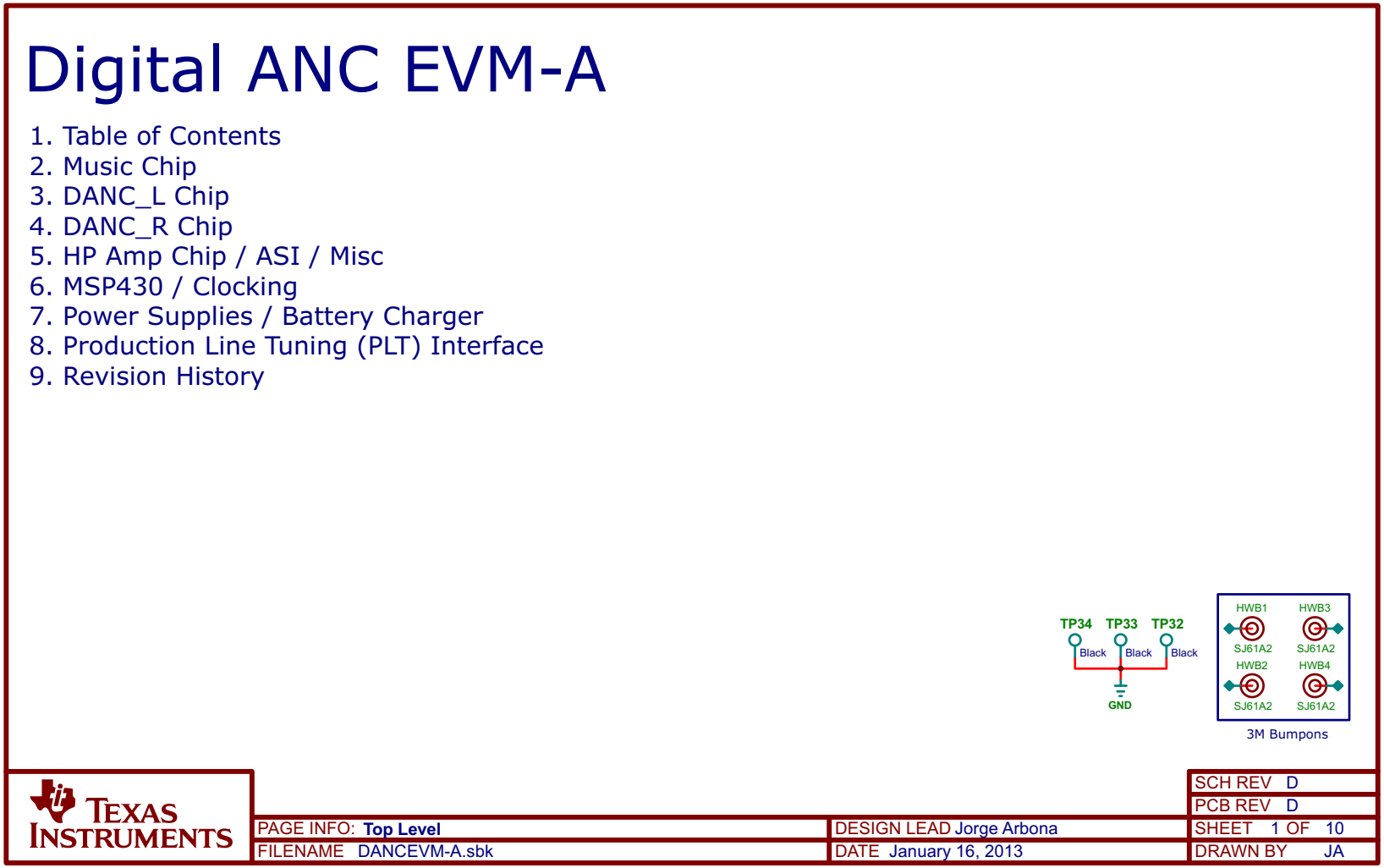

Figure 8. DANCEVM-A Schematic - Page 1 of 10

Copyright © 2013, Texas Instruments Incorporated

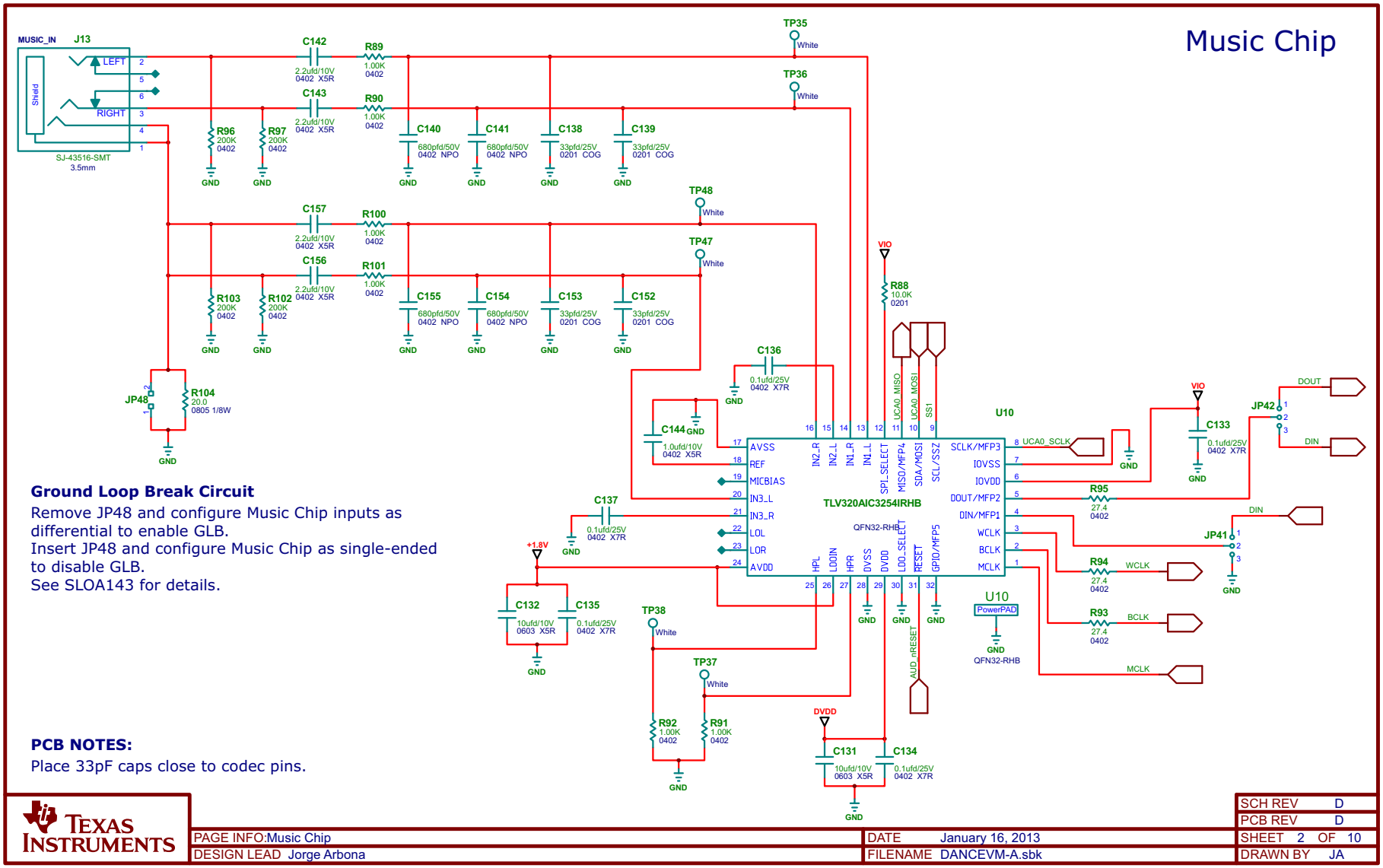

Figure 9. DANCEVM-A Schematic - Page 2 of 10

Copyright © 2013, Texas Instruments Incorporated

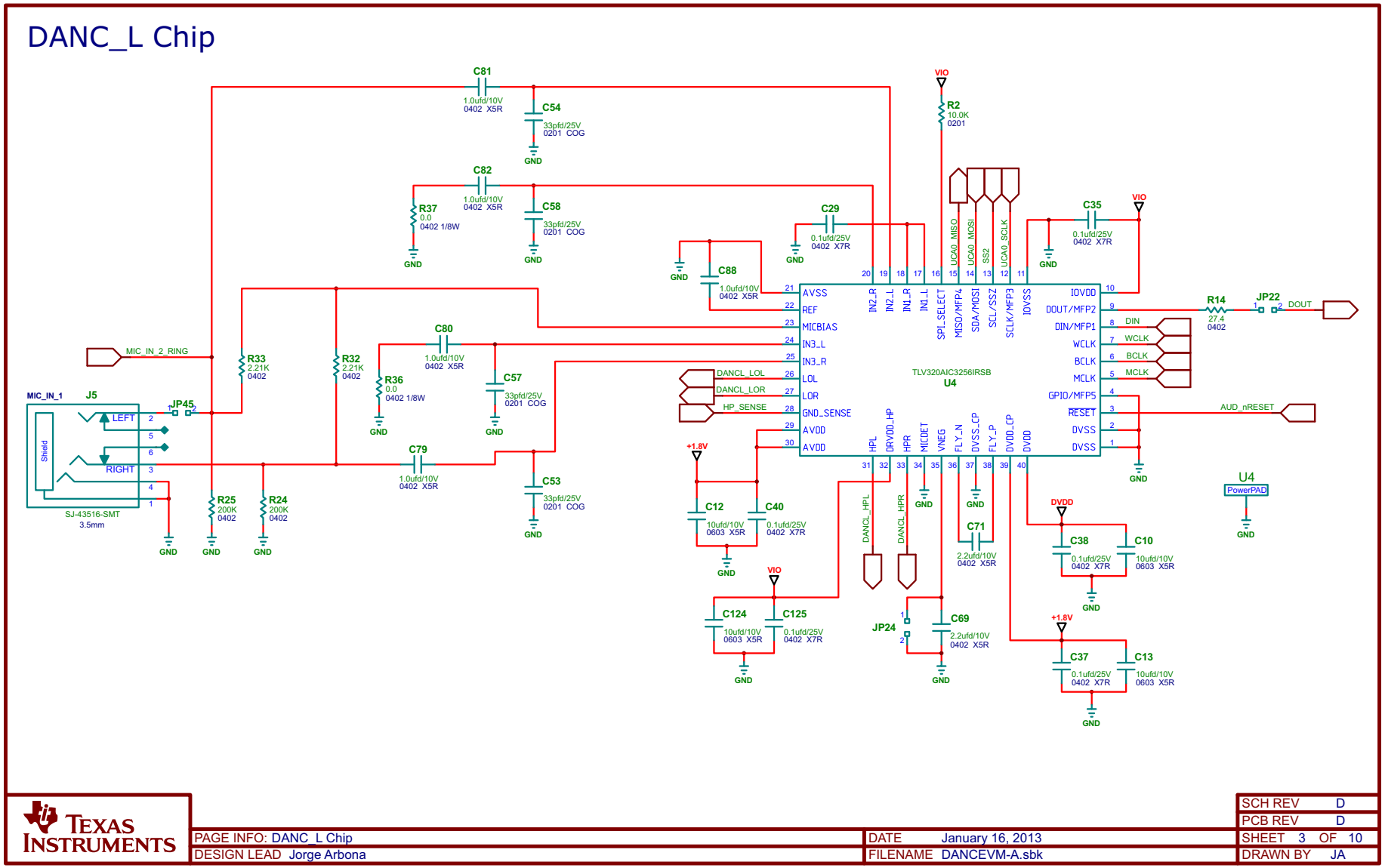

Figure 10. DANCEVM-A Schematic - Page 3 of 10

Copyright © 2013, Texas Instruments Incorporated

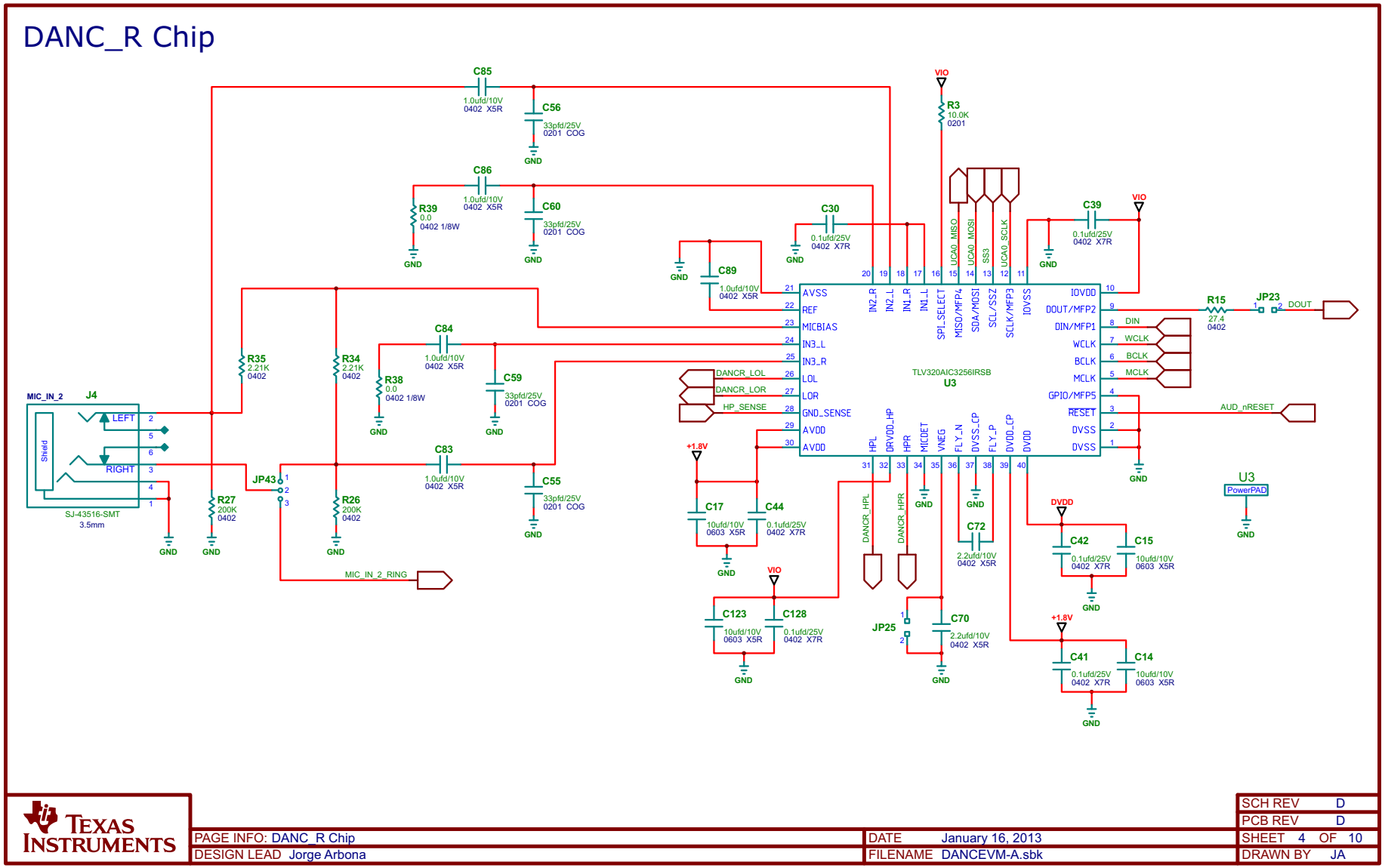

Figure 11. DANCEVM-A Schematic - Page 4 of 10

Copyright © 2013, Texas Instruments Incorporated

HP Amp Chip

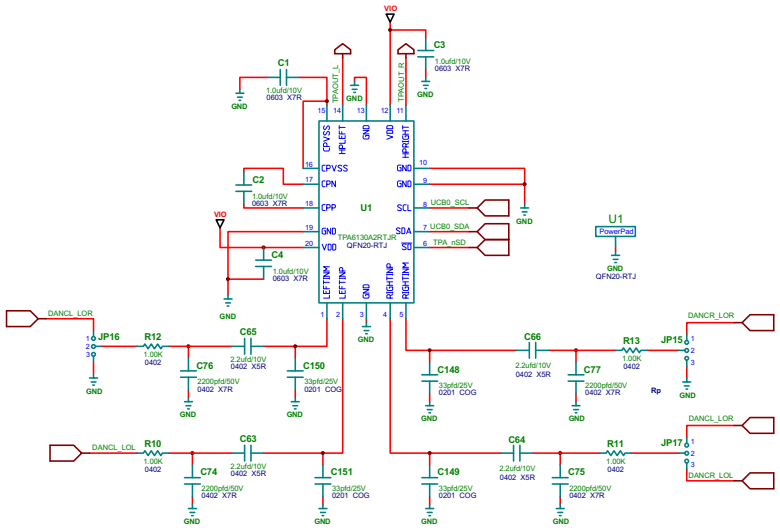

Production Line Tuning (PLT) Microphone Source

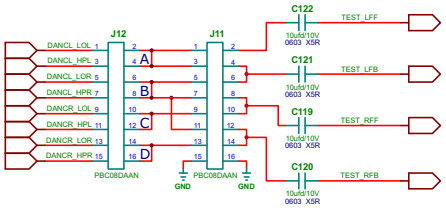

CONFIG NOTES:

For production line testing (PLT), microphone signals are sent through HP/LO of the DANC chips for buffering.
When TPA6130A2 is used as audio output amp, the DANC mics go through the LOs.
When the AIC3256s are used as audio output amps, the DANC mics go through the HPs.

Refer to the DANCEVM-A documentation for the appropriate settings.

Headphone Output Options

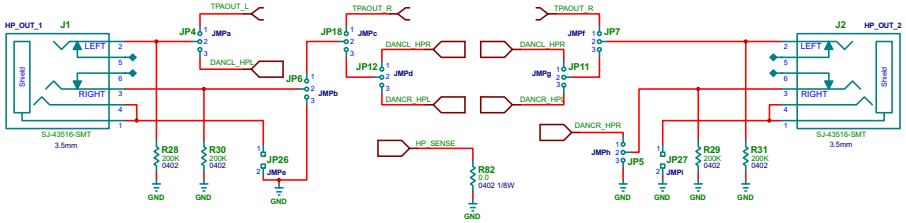

Headphone Output Routing:

Output Mode	Output Amp	JMPa	JMPb	JMPc	JMPd	JMPe	JMPf	JMPg	JMPh	JMPi
Single-Ended	TPA6130A2	1-2	1-2	1-2	N/A	Installed	N/A	N/A	N/A	N/A
	AIC3256	2-3	1-2	2-3	1-2	Installed	N/A	N/A	N/A	N/A
Bridge Tied Load	AIC3256	2-3	1-2	2-3	2-3	Installed	2-3	2-3	1-2	Installed

CONFIG NOTES:

These are the most common configurations. Other configurations include single-ended to both HP_OUT_1 and HP_OUT_2.

Audio Serial Interface (ASI) Connector

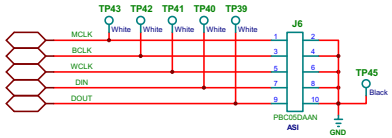

PAGE INFO: **HP Amp Chip / ASI / Misc**	DATE January 16, 2013	SCH REV D	
DESIGN LEAD Jorge Arbona	FILENAME DANCEVM-A.sbk	PCB REV D	
		SHEET 5 OF 10	
		DRAWN BY JA	

Figure 12. DANCEVM-A Schematic - Page 5 of 10

Copyright © 2013, Texas Instruments Incorporated

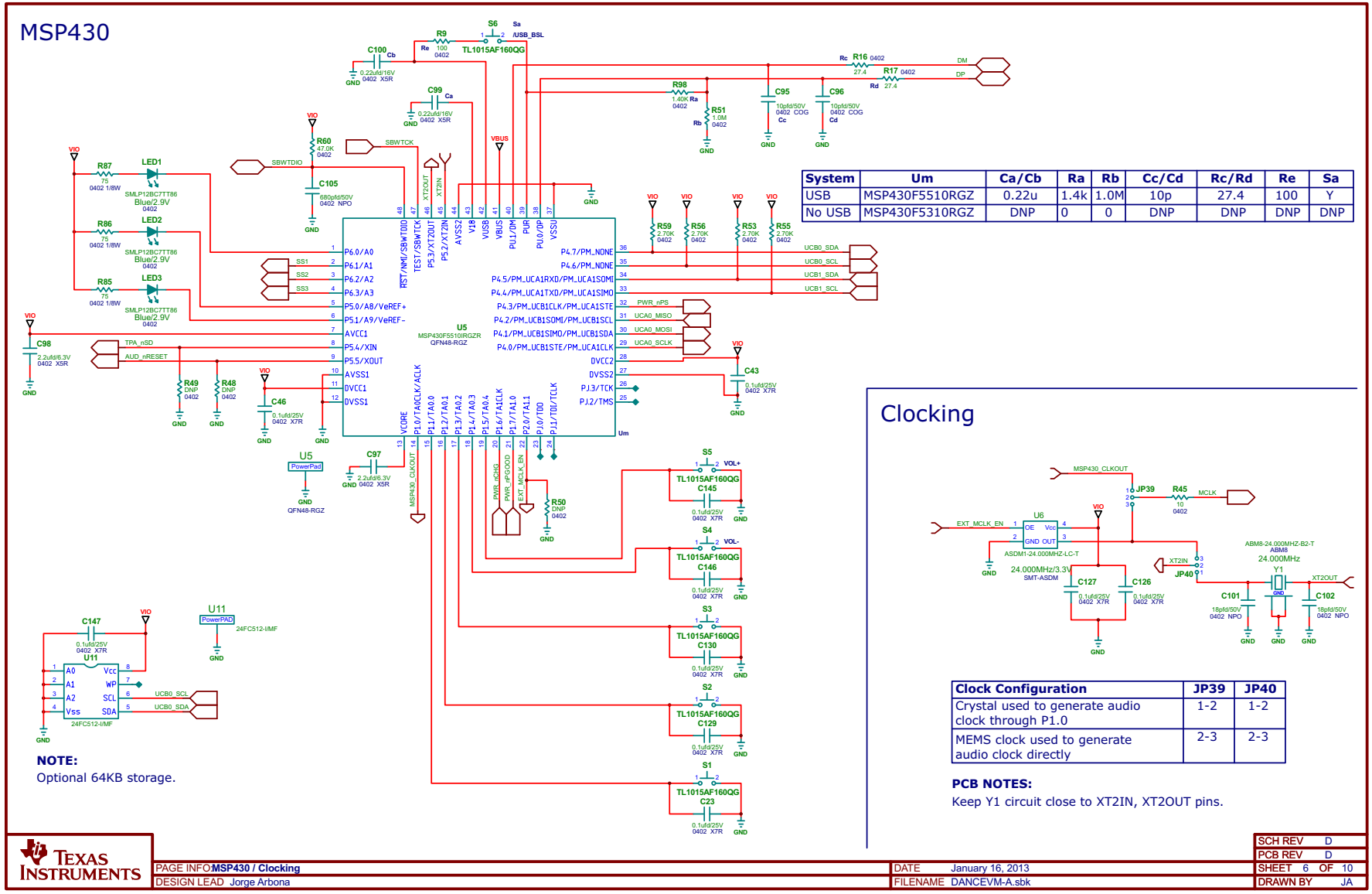

System	Um	Ca/Cb	Ra	Rb	Cc/Cd	Rc/Rd	Re	Sa
USB	MSP430F5510RGZ	0.22u	1.4k	1.0M	10p	27.4	100	Y
No USB	MSP430F5310RGZ	DNP	0	0	DNP	DNP	DNP	DNP

Clock Configuration	JP39	JP40
Crystal used to generate audio clock through P1.0	1-2	1-2
MEMS clock used to generate audio clock directly	2-3	2-3

Figure 13. DANCEVM-A Schematic - Page 6 of 10

Copyright © 2013, Texas Instruments Incorporated

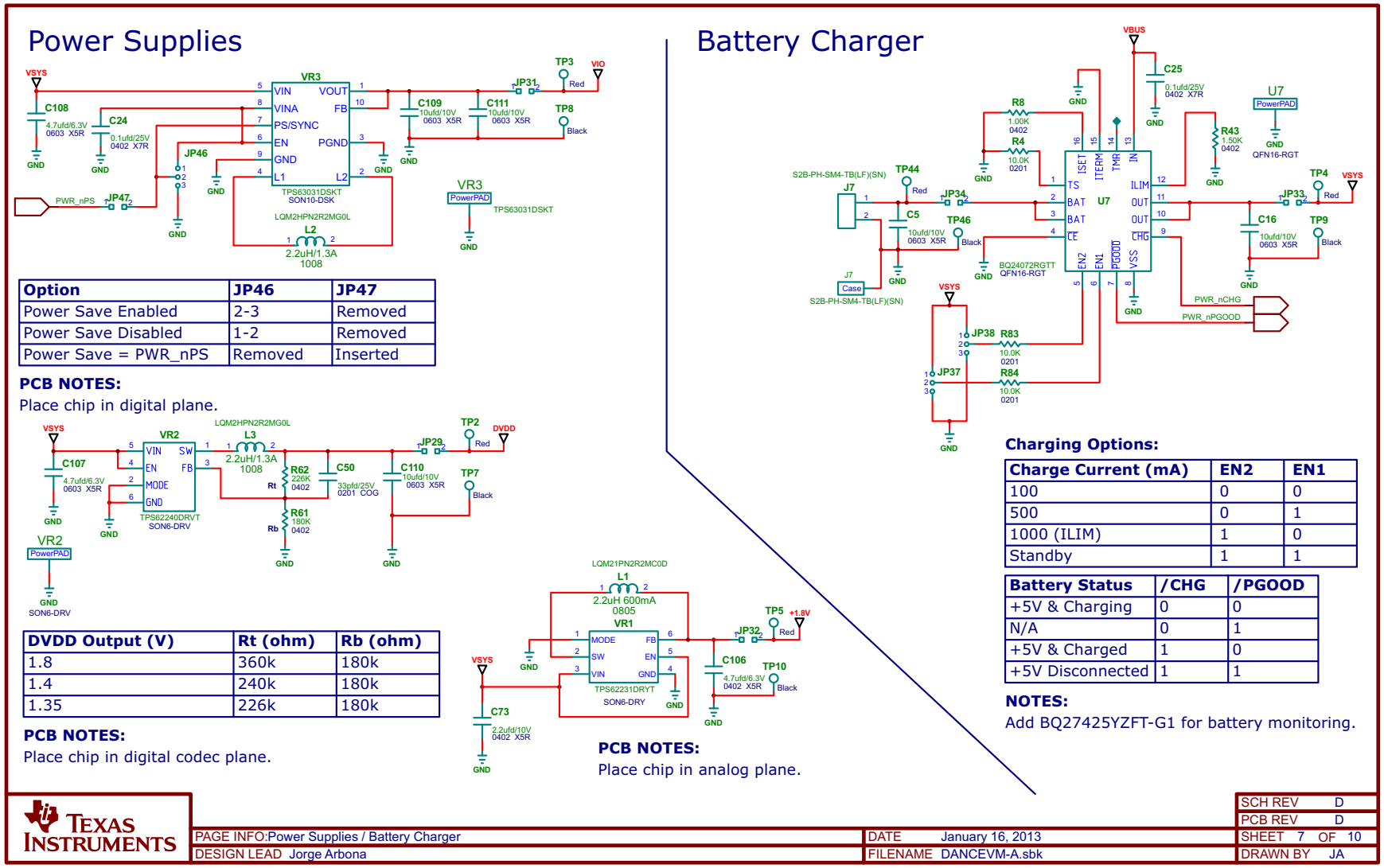

Figure 14. DANCEVM-A Schematic - Page 7 of 10

Copyright © 2013, Texas Instruments Incorporated

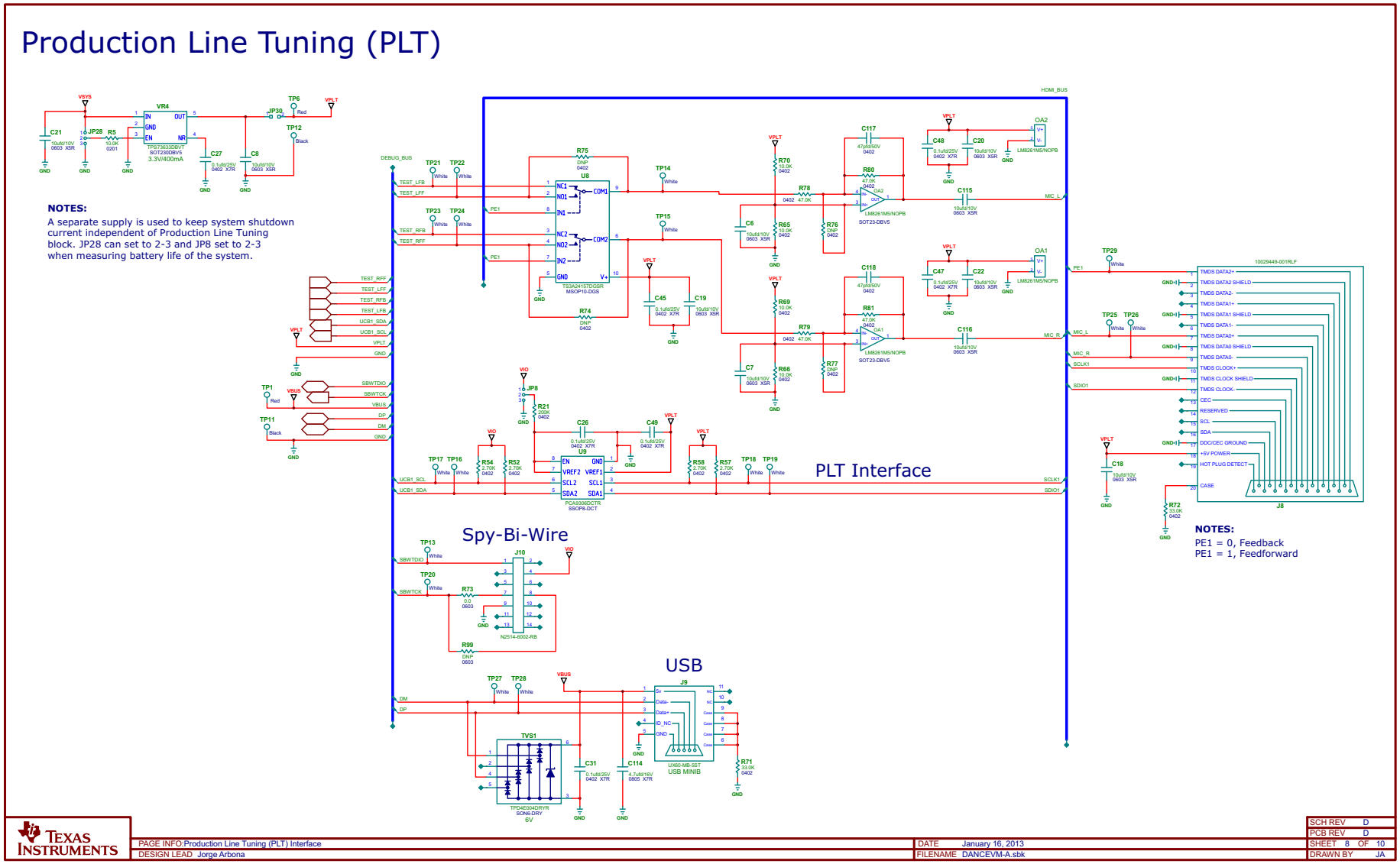

Figure 15. DANCEVM-A Schematic - Page 8 of 10

Copyright © 2013, Texas Instruments Incorporated

DANCEVM-A REV C

REVISION HISTORY

REVISION	DESCRIPTION	DATE	APPROVAL
C	RELEASE	November 6, 2012	JA
D	- Added jumper options for TPS63031 power save. - Added ground loop break circuit for Music Chip. - Changed Spy-bi-wire capacitor from 2.2nF to 680pF.	December 10, 2012	JA

PAGE INFO: REVISION HISTORY		DATE January 16, 2013	SCH REV D
DESIGN LEAD Jorge Arbona	EDGE # 6568512	FILENAME DANCEVM-A.sbk	PCB REV D
			SHEET 9 OF 10
			DRAWN BY JA

Figure 16. DANCEVM-A Schematic - Page 9 of 10

Copyright © 2013, Texas Instruments Incorporated

TEXAS INSTRUMENTS DISCLAIMER

The information and materials ("Materials") provided here are provided by Texas Instruments Incorporated ("TI") as a service to its customers and/or suppliers, and may be used for informational purposes only, and only subject to the following terms. By downloading or viewing these Materials, you are signifying your assent to these terms.

1.) These preliminary evaluation schematics are intended for use for PRELIMINARY ENGINEERING DEVELOPMENT AND EVALUATION PURPOSES ONLY and are not considered by Texas Instruments to be fit as a basis for establishing production products or systems. This information may be incomplete in several respects, including but not limited to information relating to required design, marketing, and/or manufacturing-related protective considerations and product safety measures typically found in the end-product incorporating the goods.

2.) Accordingly, neither TI nor its suppliers warrant the accuracy or completeness of the information, text, graphics, links or other items contained within the Materials. TI may make changes to the Materials, or to the products described therein, at any time without notice. TI makes no commitment to update the Materials.

3.) TI assumes no liability for applications assistance, customer product design, software performance, or services that may be described or referenced in the Materials. The user assumes all responsibility and liability for proper and safe design and handling of goods. Accordingly, the user indemnifies TI from all claims arising from its use of the Materials.

4.) TI currently deals with various customers for products, and therefore our arrangement with the user will not be exclusive. TI makes no representations regarding the commercial availability of non-TI components that may be referenced in the Materials.

5.) No license is granted under any patent right or other intellectual property right of TI covering or relating to any combination, machine, or process in which such TI products or services might be or are used. Except as expressly provided herein, TI and its suppliers do not grant any express or implied right to you under any patents, copyrights, trademarks, or trade secret information.

6.) Performance tests and ratings, to the extent referenced in the Materials, are measured using specific computer systems and/or components and reflect the approximate performance of TI products as measured by those tests. Any difference in system hardware or software design or configuration may affect actual performance. Buyers should consult other sources of information to evaluate the performance of systems or components they are considering purchasing.

7.) Resale of TI's products or services with statements different from or beyond the parameters stated by TI for that product or service in official TI data books or data sheets voids all express and any implied warranties for the associated TI product or service, and is an unfair and deceptive business practice, and TI is not responsible for any such use.

8.) The Materials are copyrighted and any unauthorized use may violate copyright, trademark, and other laws. You may only download one copy for your internal use only, unless you are specifically licensed to do otherwise by TI in writing. This is a license, not a transfer of title, and is subject to the following restrictions: You may not:

(a) modify the Materials (including any associated warranties, conditions, limitations or notices) or use them for any commercial purpose, or any public display, performance, sale or rental;
(b) decompile, reverse engineer, or disassemble software Materials except and only to the extent permitted by applicable law;
(c) remove any copyright or other proprietary notices from the Materials;
(d) transfer the Materials to another person. You agree to prevent any unauthorized copying of the Materials. TI may terminate this license at any time if you are in breach of the terms of this Agreement. Upon termination, you will immediately destroy the Materials.

9.) THE MATERIALS ARE PROVIDED "AS IS" WITHOUT ANY EXPRESS OR IMPLIED WARRANTY OF ANY KIND INCLUDING WARRANTIES OF MERCHANTABILITY, NONINFRINGEMENT OF INTELLECTUAL PROPERTY, OR FITNESS FOR ANY PARTICULAR PURPOSE. IN NO EVENT SHALL TI OR ITS SUPPLIERS BE LIABLE FOR ANY DAMAGES WHATSOEVER (INCLUDING, WITHOUT LIMITATION, DAMAGES FOR LOSS OF PROFITS, BUSINESS INTERRUPTION, LOSS OF INFORMATION) ARISING OUT OF THE USE OF OR INABILITY TO USE THE MATERIALS, EVEN IF TI HAS BEEN ADVISED OF THE POSSIBILITY OF SUCH DAMAGES.

Figure 17. DANCEVM-A Schematic - Page 10 of 10

Copyright © 2013, Texas Instruments Incorporated

4.2 DANCEVM-A Layout Views

The DANCEVM-A layout views are provided in the following pages.

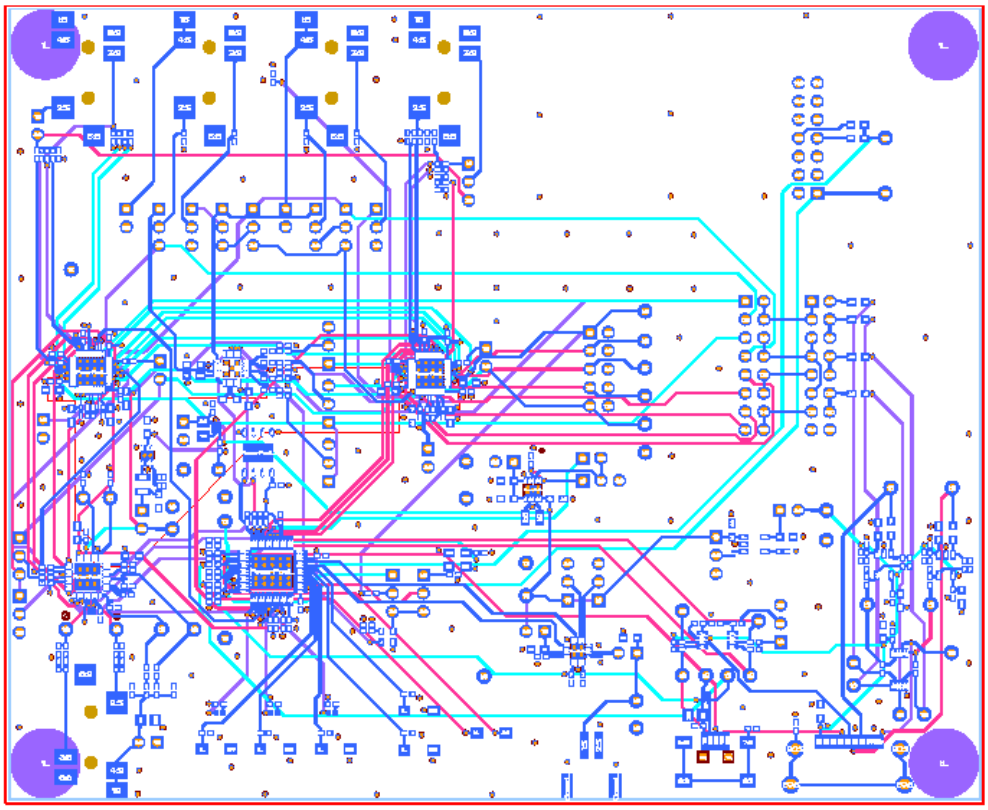

Figure 18. DANCEVM-A Layout View

Copyright © 2013, Texas Instruments Incorporated

4.3 DANCEVM-A Bill of Materials

The DANCEVM-A bill of materials is provided in Table 2.

Table 2. Bill of Materials for DANCEVM-A REVD

Qty.	Ref Designators	Description	Vendor	Vendor Part No.	Manufacturer	MANU Part No.
AIP SEMICONDUCTORS						
1	U10	LO PWR AUDIO CODEC,EMBEDDED miniDSP STEREO CLASS-D AMP ROHS	DIGI-KEY	296-23776-1	TEXAS INSTRUMENTS	TLV320AIC3254IRHB
2	U3,U4	POWER TUNED CODEC HEADPHONE AMPS MINIDSP QFN40-RSB ROHS	TEXAS INSTRUMENTS	TLV320AIC3256RSB	TEXAS INSTRUMENTS	TLV320AIC3256IRSB
1	U1	138mW DIRECTPATH STEREO HP AMP I2C QFN20-RTJ ROHS	DIGI-KEY	296-21656-1-ND	TEXAS INSTRUMENTS	TPA6130A2RTJR
1	VR1	3MHz ULTRA STEP DOWN CONVERTER SON6-DRY ROHS	MOUSER	595-TPS62231DRYT	TEXAS INSTRUMENTS	TPS62231DRYT
TI SEMICONDUCTORS						
1	U5	MIXED SIGNAL MICROCONTROLLER QFN48-RGZ ROHS	DIGI-KEY	296-28135-1-ND	TEXAS INSTRUMENTS	MSP430F5510IRGZR
1	VR2	2.25MHz 300mA STEP DOWN CONVERTER SON6-DRV ROHS	DIGI-KEY	296-22467-1-ND	TEXAS INSTRUMENTS	TPS62240DRVT
1	VR3	HI-EFFICIENCY BUCK BOOST CONVERTER WITH 1A SWITCHES SON10-DSK ROHS	DIGI-KEY	296-23904-1-ND	TEXAS INSTRUMENTS	TPS63031DSKT
1	U7	1.5A USB-FRIENDLY LI-ION BATT CHARGER QFN16-RGT ROHS	MOUSER	595-BQ24072RGTT	TEXAS INSTRUMENTS	BQ24072RGTT
1	U8	DUAL SPDT ANALOG SWITCH 0.65 OHMS MSOP10-DGS ROHS	DIGI-KEY	296-22856-1-ND	TEXAS INSTRUMENTS	TS3A24157DGSR
2	OA1, OA2	OP AMP RRIO HI OUTPUT CURRENT SOT23-DBV5 ROHS	DIGI-KEY	LM8261M5CT-ND	TEXAS INSTRUMENTS	LM8261M5/NOPB
1	VR4	VOLT REG 3.3V 400MA LDO CAP FREE NMOS SOT23-DBV5 ROHS	DIGI-KEY	296-15819-1	TEXAS INSTRUMENTS	TPS73633DBVT
1	U9	DUAL BIDIR I2C BUS AND SMBUS VOLT LEVEL TRANS SSOP8-DCT ROHS	DIGI-KEY	296-18509-1	TEXAS INSTRUMENTS	PCA9306DCTR
NON-TI SEMICONDUCTORS						
1	U11	512K I2C SERIAL EEPROM DFN8-MF ROHS	DIGI-KEY	24FC512-I/MF-ND	MICROCHIP	24FC512-I/MF
TVSs						
1	TVS1	ESD PROTECTION DIODE ARRAY 5x 6V SON6-DRY ROHS	DIGI-KEY	296-23618-1-ND	TEXAS INSTRUMENTS	TPD4E004DRYR
LEDs						
3	LED1, LED2, LED3	LED BLUE SMD0402 2.9V 10mA ROHS	DIGI-KEY	511-1615-1-ND	ROHM SEMICONDUCTOR	SMLP12BC7TT86
OSCILLATORS						
1	U6	OSCILLATOR SMT 24.000MHz 3.3V OUT-ENABLE ROHS	DIGI-KEY	535-9790-1-ND	ABRACON CORP	ASDM1-24.000MHZ-LC-T
1	Y1	CRYSTAL SMT ABM8 SERIES 24.000MHz 18ppm 10PFD ROHS	DIGI-KEY	535-9138-1-ND	ABRACOM	ABM8-24.000MHZ-B2-T

Copyright © 2013, Texas Instruments Incorporated

Table 2. Bill of Materials for DANCEVM-A REVD (continued)

Qty.	Ref Designators	Description	Vendor	Vendor Part No.	Manufacturer	MANU Part No.
CAPACITORS-SMT						
26	C5, C6, C7, C8, C10, C12, C13, C14, C15, C16, C17, C18, C19, C20, C21, C22, C115, C116, C119, C120, C121, C122, C123, C124, C131, C132	CAP SMD0603 CERM 10ufd 10V 10% X5R ROHS	DIGI-KEY	445-7486-1-ND	TDK CORP	C1608X5R1A106K
36	C23, C24, C25, C26, C27, C29, C30, C31, C35, C37, C38, C39, C40, C41, C42, C43, C44, C45, C46, C47, C48, C49, C125, C126, C127, C128, C129, C130, C133, C134, C135, C136, C137, C145, C146, C147	CAP SMD0402 CERM 0.1ufd 25V 10% X7R ROHS	DIGI-KEY	445-7348-1-ND	TDK CORP	C1005X7R1E104K
17	C50, C53, C54, C55, C56, C57, C58, C59, C60, C138, C139, C148, C149, C150, C151, C152, C153	CAP SMD0201 CERM 33PFD 25V COG 5% ROHS	DIGI-KEY	490-1255-1	MURATA	GRM0335C1E330JD01D
5	C105, C140, C141, C154, C155	CAP SMD0402 CERM 680PFD 5% 50V NPO ROHS	DIGI-KEY	490-3240-1-ND	MURATA	GRM1555C1H681JA01D
13	C63, C64, C65, C66, C69, C70, C71, C72, C73, C142, C143, C156, C157	CAP SMD0402 CERM 2.2UFD 10V 10% X5R ROHS	DIGI-KEY	445-7392-1-ND	TDK CORP	C1005X5R1A225K
11	C79, C80, C81, C82, C83, C84, C85, C86, C88, C89, C144	CAP SMD0402 CERM 1.0UFD 10V 10% X5R ROHS	DIGI-KEY	445-4114-1-ND	TDK CORP	C1005X5R1A105K
4	C1, C2, C3, C4	CAP SMD0603 CERM 1.0UFD 10V 10% X7R ROHS	DIGI-KEY	490-3899-1-ND	MURATA	GRM188R71A105KA61D
2	C95, C96	CAP SMD0402 CERM 10pfd 50V +0.5pfd COG ROHS	DIGI-KEY	445-1235-1-ND	TDK CORP.	C1005C0G1H100D
2	C97, C98	CAP SMD0402 CERM 0.22UFD 6.3V 10% X5R ROHS	DIGI-KEY	445-1267-1	TDK CORP	C1005X5R0J224
2	C99, C100	CAP SMD0402 CERM 0.22UFD 16V 10% X5R ROHS	DIGI-KEY	587-1452-1	TAIYO YUDEN	EMK105BJ224KV-F
2	C101, C102	CAP SMD0402 CERM 18PFD 50V NPO 5% ROHS	DIGI-KEY	490-1281-1	MURATA	GRM1555C1H180JZ01D
1	C106	CAP SMD0402 CERM 4.7UFD 6.3V X5R 10% ROHS	DIGI-KEY	490-5408-1-ND	MURATA	GRM155R60J475ME87D
2	C107, C108	CAP SMD603 CERM 4.7UFD 6.3V 20% X5R ROHS	DIGI-KEY	445-1417-1	TDK	C1608X5R0J475M
3	C109, C110, C111	CAP SMD0603 CERM 10UFD 10V 20% X5R ROHS	DIGI-KEY	PCC2479TR-ND	PANASONIC	ECJ-1VB1A106M
1	C114	CAP SMD0805 CERM 4.7UFD 16V 10% X7R ROHS	DIGI-KEY	490-4522-1-ND	MURATA	GRM21BR71C475KA73L
2	C117, C118	CAP SMD0402 CERM 47pfd 50V 5% COG ROHS	DIGI-KEY	709-1121-1-ND	JOHANSON	500R07N470JV4T
4	C74, C75, C76, C77	CAP SMD0402 CERM 2200PFD 50V 10% X7R ROHS	DIGI-KEY	445-1257-1-ND	TDK CORP.	C1005X7R1H222K
RESISTORS-SMT						
7	R2, R3, R4, R5, R83, R84, R88	RESISTOR SMD0201 10.0K 1% 1/20W ROHS	DIGI-KEY	RHM10KABCT-ND	ROHM	MCR006YZPF1002
11	R8, R10, R11, R12, R13, R89, R90, R91, R92, R100, R101	RESISTOR SMD0402 1.00K 1% 1/16W 100ppm ROHS	DIGI-KEY	541-1.00KLCT	VISHAY	CRCW04021K00FKED

Copyright © 2013, Texas Instruments Incorporated

Table 2. Bill of Materials for DANCEVM-A REVD (continued)

Qty.	Ref Designators	Description	Vendor	Vendor Part No.	Manufacturer	MANU Part No.
7	R14, R15, R16, R17, R93, R94, R95	RESISTOR SMD0402 THICK FILM 27.4 OHMS 1/10W 1% ROHS	DIGI-KEY	P27.4LCT-ND	PANASONIC	ERJ-2RKF27R4X
13	R21, R24, R25, R26, R27, R28, R29, R30, R31, R96, R97, R102, R103	RESISTOR SMD0402 THICK FILM 200K OHMS 1% 1/16W ROHS	DIGI-KEY	311-200KLRCT-ND	YAGEO	RC0402FR-07200KL
4	R32, R33, R34, R35	RESISTOR SMD0402 THICK FILM 2.21K OHMS 1% 1/16W ROHS	DIGI-KEY	311-2.21KLRCT-ND	YAGEO	RC0402FR-072K21L
5	R36, R37, R38, R39, R82	ZERO OHM JUMPER SMT 0402 0 OHM 1/16W, 5% ROHS	DIGI-KEY	541-0.0JCT	VISHAY	CRCW04020000Z0ED
1	R45	RESISTOR SMD0402 10 OHMS 1/16W 1% ROHS	DIGI-KEY	541-10JCT	VISHAY	CRCW040210R0JNED
1	R51	RESISTOR SMD0402 1.0M OHMS 1% 1/16W ROHS	DIGI-KEY	RMCF0402FT1M00CT	STACKPOLE ELECTRONICS	RMCF0402FT1M00
1	R9	RESISTOR SMD0402 100 OHMS 1% 1/16W ROHS	DIGI-KEY	RMCF0402FT100RCT-ND	STACKPOLE ELECTRONICS	RMCF0402FT100R
8	R52, R53, R54, R55, R56, R57, R58, R59	RESISTOR SMD0402 THICK FILM 2.70K OHMS 1% 1/16W ROHS	DIGI-KEY	311-2.70KLRCT-ND	YAGEO	RC0402FR-072K7L
5	R60, R78, R79, R80, R81	RESISTOR SMD0402 47.0K OHMS 1% 1/16W ROHS	DIGI-KEY	RMCF0402FT47K0CT-ND	STACKPOLE ELECTRONICS	RMCF0402FT47K0
3	R85, R86, R87	RESISTOR SMD0402 75 OHMS 1/8W 1% ROHS	DIGI-KEY	541-75.0YCT	VISHAY	CRCW040275R0FKEDHP
1	R61	RESISTOR SMD0402 180K OHMS 1% 1/16W ROHS	DIGI-KEY	541-180KLCT-ND	VISHAY	CRCW0402180KFKED
1	R62	RESISTOR SMD0402 226K OHMS 1% 1/16W ROHS	DIGI-KEY	541-226KLCT-ND	VISHAY	CRCW0402226KFKED
1	R43	RESISTOR SMD0402 THICK FILM 1.50K OHMS 1/10W 1% ROHS	DIGI-KEY	P1.50KLCT-ND	PANASONIC	ERJ-2RKF1501X
4	R65, R66, R69, R70	RESISTOR SMD0402 10.0K OHMS 1% 1/16W ROHS	DIGI-KEY	541-10.0KLCT	VISHAY	CRCW040210K0FKED
2	R71, R72	RESISTOR SMD0402 THICK FILM 33.0K OHMS 1% 1/16W ROHS	DIGI-KEY	311-33.0KLRCT-ND	YAGEO	RC0402FR-0733KL
1	R73	RESISTOR SMD0603 0.0 OHM 5% THICK FILM 1/10W ROHS	DIGI-KEY	P0.0GCT	PANASONIC	ERJ-3GEY0R00V
1	R98	RESISTOR SMD0402 1.40K 1%, 1/16W ROHS	DIGI-KEY	P1.40KLCT-ND	PANASONIC	ERJ-2RKF1401X
1	R104	RESISTOR SMD0805 20.0 OHMS 1% 1/8W THICK FILM ROHS	DIGI-KEY	541-20.0CCT	VISHAY	CRCW080520R0FKEA
INDUCTORS-SMT						
1	L1	INDUCTOR CERM SMD0805 2.2uH 600mA 50MHZ 20% ROHS	DIGI-KEY	490-4994-1	MURATA	LQM21PN2R2MC0D
FERRITES BEADS-SMT						
2	L2, L3	INDUCTOR SMD1008 2.2uH 1.3A 100mOHMS 40MHz 20% ROHS	DIGI-KEY	490-5114-1-ND	MURATA	LQM2HPN2R2MG0L
HEADERS-MALE						
20	JP4, JP5, JP6, JP7, JP8, JP11, JP12, JP15, JP16, JP17, JP18, JP28, JP37, JP38, JP39, JP40, JP41, JP42, JP43, JP46	HEADER THRU MALE 3 PIN 100LS 120 TAIL GOLD ROHS	DIGI-KEY	S1011E-03-ND	SULLINS	PBC03SAAN

Copyright © 2013, Texas Instruments Incorporated

Table 2. Bill of Materials for DANCEVM-A REVD (continued)

Qty.	Ref Designators	Description	Vendor	Vendor Part No.	Manufacturer	MANU Part No.
15	JP22, JP23, JP24, JP25, JP26, JP27, JP29, JP30, JP31, JP32, JP33, JP34, JP45, JP47, JP48	HEADER THRU MALE 2 PIN 100LS 120 TAIL GOLD ROHS	DIGI-KEY	S1011E-02	SULLINS	PBC02SAAN
1	J6	HEADER THRU MALE 2X5 PIN 100LS 120 TAIL GOLD ROHS	DIGI-KEY	S2011E-05	SULLINS	PBC05DAAN
2	J11, J12	HEADER THRU MALE 2X8 100LS 120 TAIL GOLD ROHS	DIGI-KEY	S2011E-08	SULLINS	PBC08DAAN
1	J7	HEADER 2 Pin-MALE SMT 2mm PITCH SIDE ENTRY ROHS	DIGI-KEY	455-1749-2	JST	S2B-PH-SM4-TB(LF)(SN)
1	J10	HEADER SHROUDED 100LS MALE GOLD 2X7 PINS ROHS	DIGI-KEY	MHC14K	3M	N2514-6002-RB
JACKS/CONNECTORS						
5	J1, J2, J4, J5, J13	JACK AUDIO-STEREO MINI(3.5MM , 4-COND SMT-RA ROHS	DIGI-KEY	CP-43516SJCT	CUI STACK	SJ-43516-SMT
1	J8	JACK HDMI TYPE A SMD RIGHT ANGLE ROHS	DIGI-KEY	609-1010-1-ND	FCI	10029449-001RLF
1	J9	JACK USB MINIB SMT-RA 5PIN ROHS	DIGI-KEY	H2959CT	HIROSE	UX60-MB-5ST
TESTPOINTS						
28	TP13, TP14, TP15, TP16, TP17, TP18, TP19, TP20, TP21, TP22, TP23, TP24, TP25, TP26, TP27, TP28, TP29, TP35, TP36, TP37, TP38, TP39, TP40, TP41, TP42, TP43, TP47, TP48	PC TESTPOINT, WHITE, ROHS	DIGI-KEY	5002K	KEYSTONE ELECTRONICS	5002
7	TP1, TP2, TP3, TP4, TP5, TP6, TP44	PC TESTPOINT, RED, ROHS	DIGI-KEY	5000K	KEYSTONE ELECTRONICS	5000
11	TP7, TP8, TP9, TP10, TP11, TP12, TP32, TP33, TP34, TP45, TP46	PC TESTPOINT, BLACK, ROHS	DIGI-KEY	5001K	KEYSTONE ELECTRONICS	5001
SWITCHES-SMT						
6	S1, S2, S3, S4, S5, S6	SWITCH, MOM, 160G SMT 4X3MM ROHS	DIGI-KEY	EG4344CT	E-SWITCH	TL1015AF160QG
STANDOFFS AND HARDWARE						
4	HWB1, HWB2, HWB3, HWB4	BUMPON RUBBER BLACK 0.375in x 0.235in ROHS	DIGI-KEY	SJ5748-0-ND	3M	SJ61A2
COMPONENTS NOT ASSEMBLED						
7	R48, R49, R50, R74, R75, R76, R77	R0402_DNP	NO VENDOR DATA	NO VENDOR PARTNUM DATA	NO MANUFACTURER DATA	R0402_DNP
1	R99	R0603_DNP	NO VENDOR DATA	NO VENDOR PARTNUM DATA	NO MANUFACTURER DATA	R0603_DNP
	Component Count: 346					

Copyright © 2013, Texas Instruments Incorporated

IMPORTANT NOTICE

Texas Instruments Incorporated and its subsidiaries (TI) reserve the right to make corrections, enhancements, improvements and other changes to its semiconductor products and services per JESD46, latest issue, and to discontinue any product or service per JESD48, latest issue. Buyers should obtain the latest relevant information before placing orders and should verify that such information is current and complete. All semiconductor products (also referred to herein as “components”) are sold subject to TI’s terms and conditions of sale supplied at the time of order acknowledgment.

TI warrants performance of its components to the specifications applicable at the time of sale, in accordance with the warranty in TI’s terms and conditions of sale of semiconductor products. Testing and other quality control techniques are used to the extent TI deems necessary to support this warranty. Except where mandated by applicable law, testing of all parameters of each component is not necessarily performed.

TI assumes no liability for applications assistance or the design of Buyers’ products. Buyers are responsible for their products and applications using TI components. To minimize the risks associated with Buyers’ products and applications, Buyers should provide adequate design and operating safeguards.

TI does not warrant or represent that any license, either express or implied, is granted under any patent right, copyright, mask work right, or other intellectual property right relating to any combination, machine, or process in which TI components or services are used. Information published by TI regarding third-party products or services does not constitute a license to use such products or services or a warranty or endorsement thereof. Use of such information may require a license from a third party under the patents or other intellectual property of the third party, or a license from TI under the patents or other intellectual property of TI.

Reproduction of significant portions of TI information in TI data books or data sheets is permissible only if reproduction is without alteration and is accompanied by all associated warranties, conditions, limitations, and notices. TI is not responsible or liable for such altered documentation. Information of third parties may be subject to additional restrictions.

Resale of TI components or services with statements different from or beyond the parameters stated by TI for that component or service voids all express and any implied warranties for the associated TI component or service and is an unfair and deceptive business practice. TI is not responsible or liable for any such statements.

Buyer acknowledges and agrees that it is solely responsible for compliance with all legal, regulatory and safety-related requirements concerning its products, and any use of TI components in its applications, notwithstanding any applications-related information or support that may be provided by TI. Buyer represents and agrees that it has all the necessary expertise to create and implement safeguards which anticipate dangerous consequences of failures, monitor failures and their consequences, lessen the likelihood of failures that might cause harm and take appropriate remedial actions. Buyer will fully indemnify TI and its representatives against any damages arising out of the use of any TI components in safety-critical applications.

In some cases, TI components may be promoted specifically to facilitate safety-related applications. With such components, TI’s goal is to help enable customers to design and create their own end-product solutions that meet applicable functional safety standards and requirements. Nonetheless, such components are subject to these terms.

No TI components are authorized for use in FDA Class III (or similar life-critical medical equipment) unless authorized officers of the parties have executed a special agreement specifically governing such use.

Only those TI components which TI has specifically designated as military grade or “enhanced plastic” are designed and intended for use in military/aerospace applications or environments. Buyer acknowledges and agrees that any military or aerospace use of TI components which have ***not*** been so designated is solely at the Buyer's risk, and that Buyer is solely responsible for compliance with all legal and regulatory requirements in connection with such use.

TI has specifically designated certain components as meeting ISO/TS16949 requirements, mainly for automotive use. In any case of use of non-designated products, TI will not be responsible for any failure to meet ISO/TS16949.

Products		**Applications**	
Audio	www.ti.com/audio	Automotive and Transportation	www.ti.com/automotive
Amplifiers	amplifier.ti.com	Communications and Telecom	www.ti.com/communications
Data Converters	dataconverter.ti.com	Computers and Peripherals	www.ti.com/computers
DLP® Products	www.dlp.com	Consumer Electronics	www.ti.com/consumer-apps
DSP	dsp.ti.com	Energy and Lighting	www.ti.com/energy
Clocks and Timers	www.ti.com/clocks	Industrial	www.ti.com/industrial
Interface	interface.ti.com	Medical	www.ti.com/medical
Logic	logic.ti.com	Security	www.ti.com/security
Power Mgmt	power.ti.com	Space, Avionics and Defense	www.ti.com/space-avionics-defense
Microcontrollers	microcontroller.ti.com	Video and Imaging	www.ti.com/video
RFID	www.ti-rfid.com		
OMAP Applications Processors	www.ti.com/omap	**TI E2E Community**	e2e.ti.com
Wireless Connectivity	www.ti.com/wirelessconnectivity		

Mailing Address: Texas Instruments, Post Office Box 655303, Dallas, Texas 75265
Copyright © 2013, Texas Instruments Incorporated